3-Pipe ECOi EX MF3 Series R410A

Simultaneous heating and cooling VRF system.

The Panasonic 3-Pipe ECOi EX MF3 Series offers the best solution for the most discerning customers and demanding installations.

Simultaneous heating and cooling VRF System

The Panasonic 3-Pipe ECOi EX MF3 Series offers the ideal solution to meet customer's demands.

Upgraded energy efficiency utilized ECOi EX technology.
- SEER / SCOP improved in full capacities from 8 to 16 HP
- SEER / SCOP follows LOT21 (January 2018)
- Eurovent certified EER / COP

Design flexibility.
- High reliability even under extreme temperature conditions
- Connection of up to 52 indoor units
- Slim heat recovery box with just 200 mm height
- Farthest piping length between indoor and outdoor units: 200 m

Excellent seasonal energy saving.

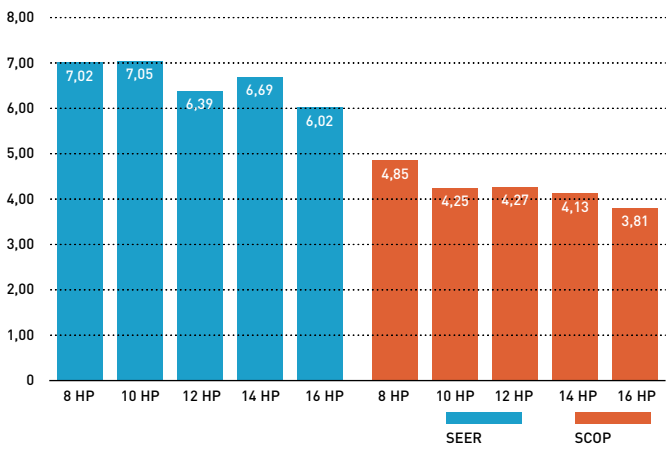

Extended design operation conditions

Cooling design operation conditions: The cooling operating range has been extended to -10 °C ~ 52 °C by changing the outdoor fan to an Inverter type.
Heating design operation conditions: Stable heating operation even with an outside air temperature of -20 °C. The heating operating range has been extended to -20 °C by use of a compressor with a high-pressure vessel.

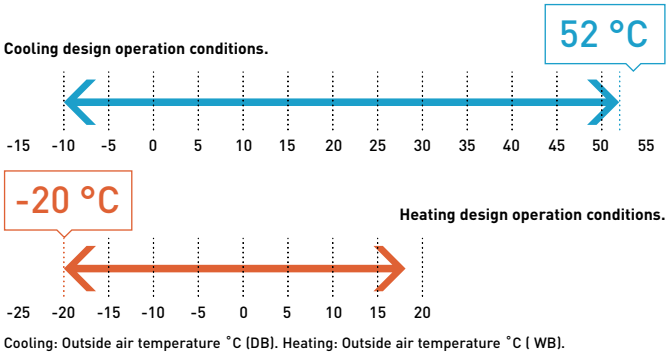

Cooling: Outside air temperature °C (DB). Heating: Outside air temperature °C (WB).

Wide temperature setting range

Wired remote controller heating temperature setting range is 16 to 30 °C as standard.

Increased maximum number of connectable indoor units

Maximum 48 HP with 52 indoor units can be set up according to user needs.
Connectable indoor / outdoor unit capacity ratio up to 150%.

System (HP)	8	10	12	14	16	18	20	22	24	26	28	30	32	34	36	38	40	42	44	46	48
Connectable indoor units*: 150%	19	24	29	34	39	43	48	52				52									

*Depending on indoor units types. Please check service manuals.

Power suppression control for energy saving (demand control) [1]

The 3-Pipe ECOi EX MF3 Series has a built-in demand function which uses the Inverter characteristics. With this demand function, the power consumption can be set in three steps, and operation [2] at optimum performance is performed according to the setting and the power consumption. This function is useful to reduce the annual power consumption and to save electricity costs while maintaining comfort.

1) An outdoor Seri-Para I/O unit is required for demand input.
2) Setting is possible as 0% or in the range from 40 to 100% (in steps of 5%). At the time of shipping, setting has been done to the three steps of 0%, 70%, and 100%.

Slim 3-Pipe control box kit / Multiple connection type

Heat recovery Box to connect multiple indoor units with just one box, 4, 6 and up to 8 indoor units or groups.

The height is only 200 mm, which is especially advantageous in hotel applications, where space for connecting several boxes is limited.

Individual control of multiple indoor units with solenoid valve kits.

· Any design and layout can be used in a single system.
· Cooling operation is possible with an outdoor temperature of -10 °C.

System structure.

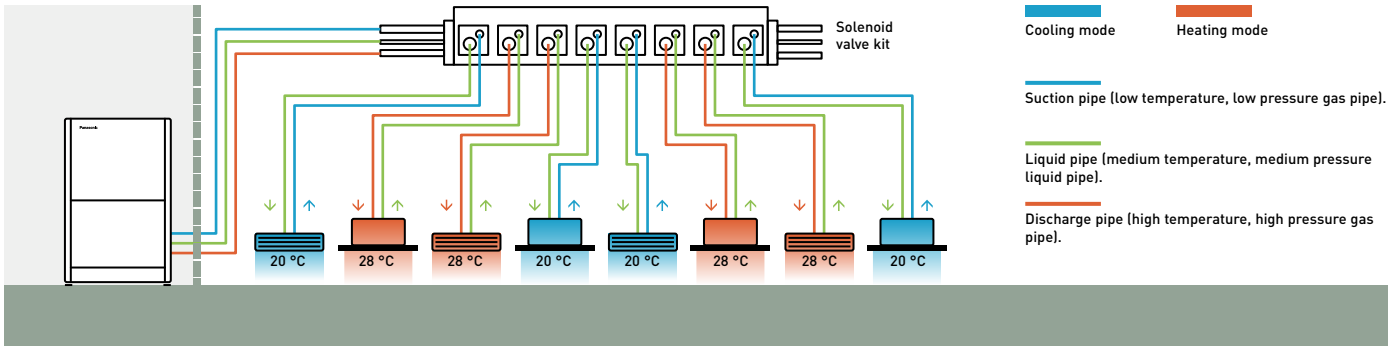




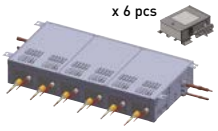

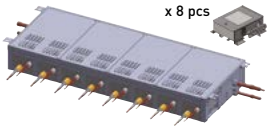

	1 port	4 port	6 port	8 port
56 type	CZ-P56HR3	CZ-P456HR3	CZ-P656HR3	CZ-P856HR3
160 type	CZ-P160HR3	CZ-P4160HR3	—	—

Solenoid valve kit / wiring work

Single connection type.

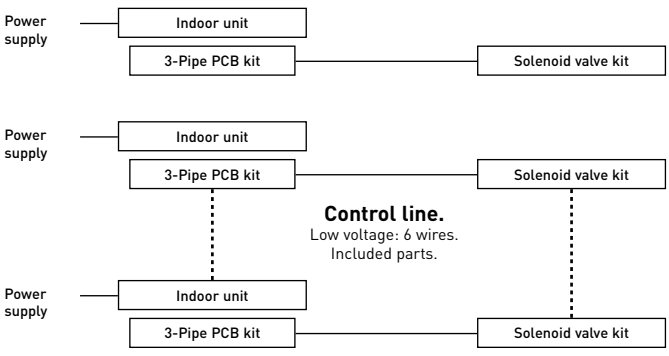

Multiple connection type.

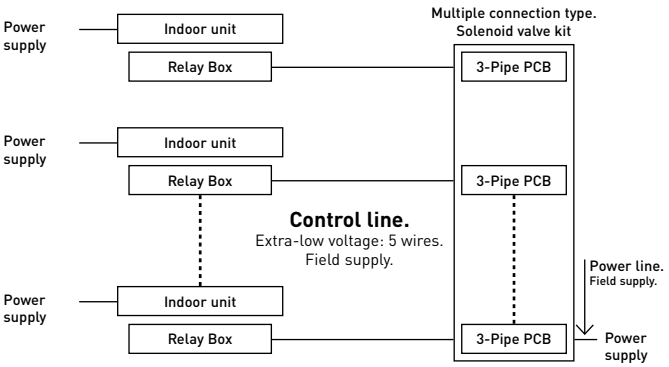

3-Pipe PCB kit.
Separately purchased.



Single HR3 kit.



Signal Relay Box.
Included accessory.

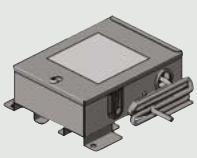

Multiple HR3 kit.

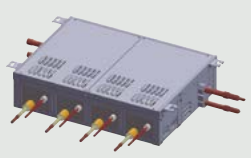

3-Pipe ECOi EX MF3 Series R410A superior flexibility

Increased piping lengths and design flexibility

Adaptable to various building types and sizes. Actual piping length: 200 m. Maximum piping length: 500 m.

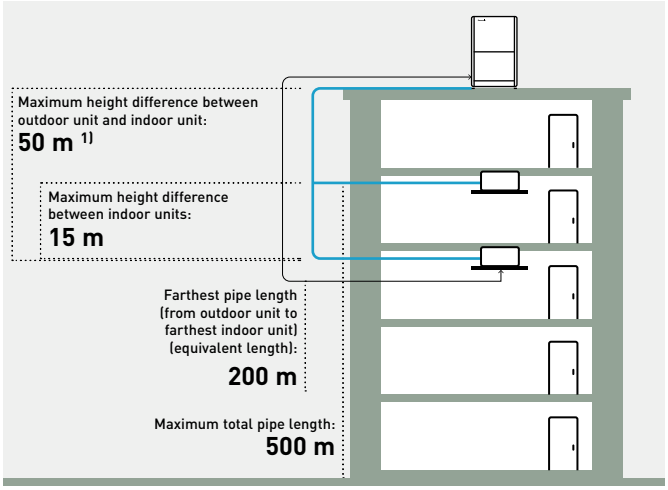

1) 40 m if the outdoor unit is below the indoor unit.

Up to 40 m piping after first branch

Up to 52 units can be connected to one system. Flexible piping layout makes it easier to design systems for locations such as train stations, airports, schools and hospitals.

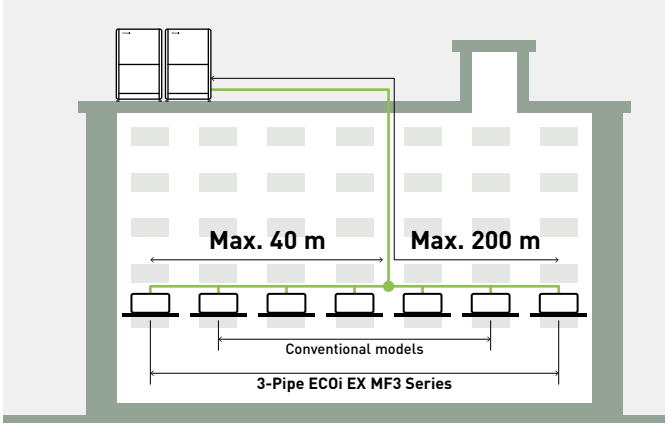

Excellent cost saving and smaller piping size

By using R410A with low pressure loss, pipe sizes for discharge, suction and liquid are all reduced.
This makes it possible to aim for reduced piping space, improved workability at the site, and reduction of the piping material costs.

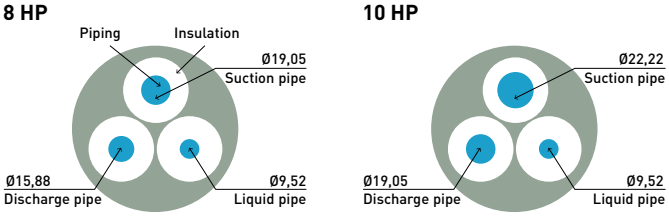

High external static pressure on condensers

With an efficient fan shape, fan guard, motor, and casing, the models can be custom-installed on-site to provide up to 80 Pa of external static pressure.

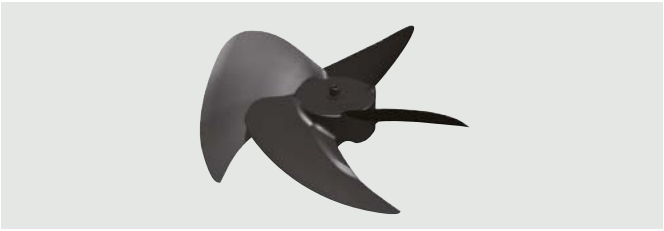

Fan.

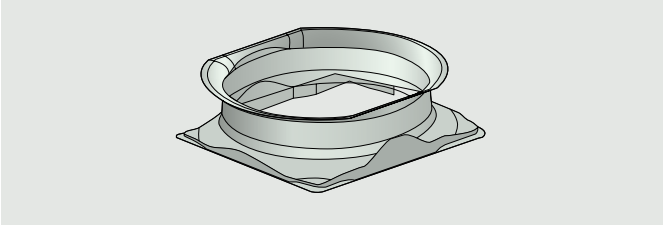

Bell-mouth casing.

An air discharge duct prevents air flow short-circuiting, allowing outdoor units to be installed on every floor of a building.

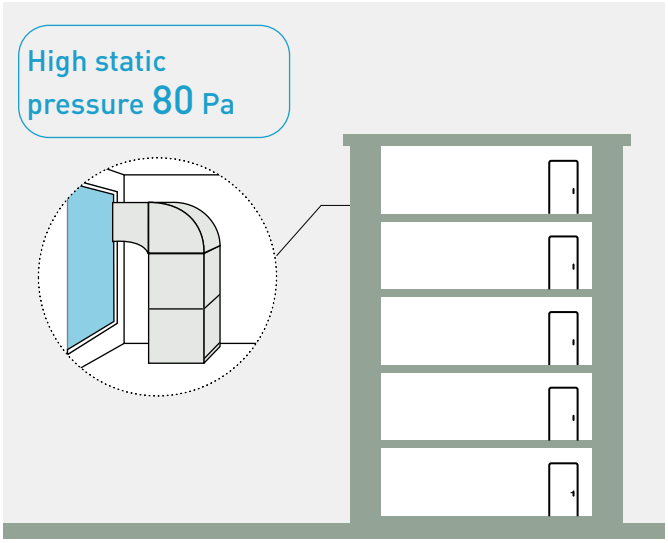

3-Pipe ECOi EX MF3 Series R410A piping design.

Select installation locations so that the lengths and sizes of refrigerant piping are within the allowable ranges shown in the figure below.

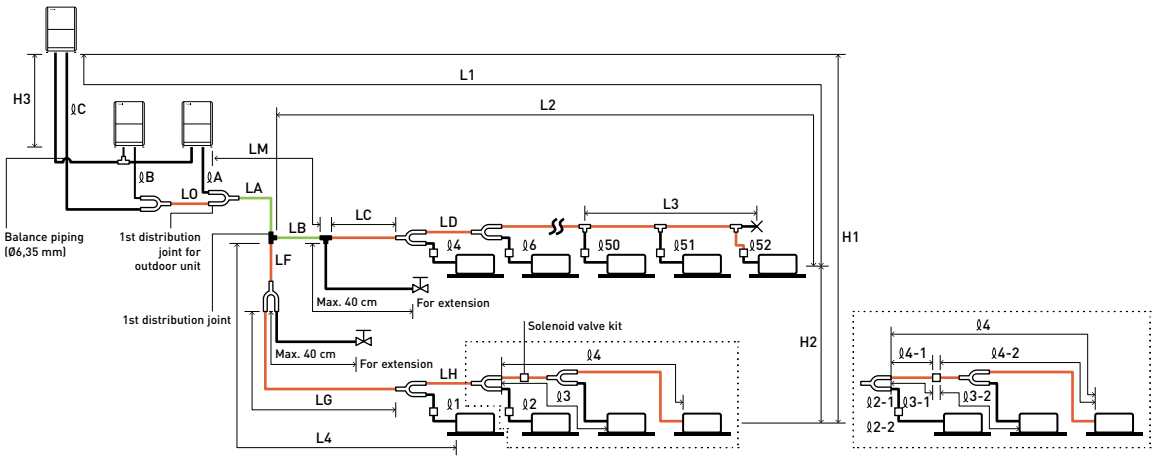

The outdoor connection main piping (LO portion) is determined by the total capacity of the outdoor units that are connected to the tube ends.
Note: Be sure to use special R410A distribution joints (CZ: optional parts) for outdoor unit connections and piping branches.

R410A distribution joint.
CZ-P680PJ2BM
(for outdoor unit)
CZ-P1350PJ2BM
(for outdoor unit)
CZ-P224BH2BM
(for indoor unit)
CZ-P680BH2BM
(for indoor unit)
CZ-P1350BH2BM
(for indoor unit)

Main piping length (maximum piping size) LM= LA + LB ...

Main distribution tubes LC – LH are selected according to the capacity after the distribution joint.

Sizes of indoor unit connection piping ℓ1 – ℓ52 are determined by the connection piping sizes on the indoor units.

Distribution joint (CZ: optional parts).

T-joint (field supply).

Ball valve (field supply).

Solidly welded shut (pinch weld).

Ranges that apply to refrigerant piping lengths and to differences in installation heights

Items	Mark	Contents		Length (m)
Allowable piping length	L1	Maximum piping length	Actual length	≤200[1]
			Equivalent length	≤210[1]
	Δ L (L2-L4)	Difference between maximum length and minimum length from the 1st distribution joint		≤50[2]
	LM	Maximum length of main piping (at maximum size) *Even after 1st distribution joint, LM is allowed if at maximum piping length.		—[3]
	ℓ1, ℓ2~ ℓ52	Maximum length of each distribution tube		≤50[4]
	L1+ ℓ1+ ℓ2~ ℓ51+ ℓA+ℓB+LF+LG+LH	Total maximum piping length including length of each distribution tube (only liquid piping)		≤500
	ℓA, ℓB+LO, ℓC+LO	Maximum piping length from outdoor's 1st distribution joint to each outdoor unit		≤10
	ℓ1-2, ℓ2-2 ~ ℓ52-2	Maximum length between solenoid valve kit and indoor unit		≤30
Allowable elevation difference	H1	When outdoor unit is installed higher than indoor unit		≤50
		When outdoor unit is installed lower than indoor unit		≤40
	H2	Maximum difference between indoor units		≤15[5]
	H3	Maximum difference between outdoor units		≤4
Allowable length of joint piping	L3	T-joint piping (field-supply); Maximum piping length between the first T-joint and solidly welded-shut end point		≤2

L = Length, H = Height

1) If the longest piping length (L1) exceeds 90 m (equivalent length), increase the sizes of the main pipes (LM) by 1 rank for suction pipes, discharge pipes and liquid pipes. Use a field supply reducer. Select the pipe size from the table of main piping sizes (Table 3) and from the table of refrigerant piping sizes (Table 8). 2) If the longest main piping length (LM) exceeds 50 m, increase the main piping size at the portion before 50 m by 1 rank for the suction pipes and discharge pipes. Use a field supply reducer. Determine the length less than the limitation of allowable maximum piping length. For the portion that exceeds 50 m, set based on the main piping size (LA) listed in Table 3. 3) If the piping length marksd "L" (L2-L4) exceeds 40 m, increase the piping size at the portion after the 1st distribution joint by 1 rank for the liquid pipe, suction pipe and discharge pipe. Refer to the Technical Data for the details. 4) If any of the piping length exceeds 30 m, increase the size of the suction pipes,discharge pipes and liquid pipes by 1rank.
*The outdoor connection main piping (LO portion) is determined by the total capacity of the outdoor units that are connected to the pipe ends.

System limitations.

Maximum number allowable connected outdoor units	3
Maximum capacity allowable connected outdoor units	135 kW (48 HP)
Maximum connectable indoor units	52
Maximum allowable indoor / outdoor capacity ratio	50-150%

Additional refrigerant charge.

Liquid piping size (Inch (mm))	1/4 (6,35)	3/8 (9,52)	1/2 (12,70)	5/8 (15,88)	3/4 (19,05)	7/8 (22,22)
Amount of refrigerant charge (g/m)	26	56	128	185	259	366

1) In the case of 24 HP (type 68 kW) or smaller units, the number is limited by the total capacity of the connected indoor units.
2) Up to 3 units can be connected if the system has been extended.
3) It is strongly recommended that you choose the unit so the load can become between 50 and 130%.

Necessary amount of additional refrigerant charge per meter, according to discharge piping size.

Discharge piping size	Inch (mm)	1/2 (12,70)	5/8 (15,88)	3/4 (19,05)	7/8 (22,22)	1 (25,40)	1-1/8 (28,58)	1-1/4 (31,75)	1-1/2 (38,10)
Additional amount	g/m	12	21	31	41	55	71	89	126

Refrigerant piping.

Piping size (mm)											
Material Temper - O						**Material Temper - 1/2 H, H**					
Ø6,35	t 0,8	Ø12,70	t 0,8	Ø19,05	t 1,2	Ø22,22	t 1,0	Ø28,58	t 1,0	Ø38,10	t 1,15
Ø9,52	t 0,8	Ø15,88	t 1,0			Ø25,40	t 1,0	Ø31,75	t 1,1	Ø41,28	t 1,20

*When bending the tubes, use a bending radius that is at least 4 times the outer diameter of the tubes. In addition, take sufficient care to avoid crushing or damaging the tubes when bending them.

3-Pipe ECOi EX MF3 Series · R410A

Simultaneous heating and cooling operation with heat recovery type.
The 3-Pipe ECOi EX MF3 Series is one of the most advanced VRF systems.
Not only highly efficient performance for simultaneous heating and cooling, but also sophisticated installation and maintenance capability.

4,85 SCOP



HP			8 HP	10 HP	12 HP	14 HP	16 HP
Outdoor unit			**U-8MF3E8**	**U-10MF3E8**	**U-12MF3E8**	**U-14MF3E8**	**U-16MF3E8**
Power supply	Voltage	V	380 - 400 - 415	380 - 400 - 415	380 - 400 - 415	380 - 400 - 415	380 - 400 - 415
	Phase		Three phase	Three phase	Three phase	Three phase	Three phase
	Frequency	Hz	50	50	50	50	50
Cooling capacity		kW	22,4	28,0	33,5	40,0	45,0
EER [1]		W/W	5,11	4,72	3,91	3,70	3,49
Current		A	7,16 - 6,80 - 6,55	9,90 - 9,41 - 9,07	3,19 - 13,20 - 12,70	18,20 - 17,30 - 16,70	21,30 - 20,20 - 19,50
Input power		kW	4,38	5,93	8,57	10,80	12,90
Heating capacity		kW	25,0	31,5	37,5	45,0	50,0
COP [1]		W/W	5,25	5,17	4,51	4,21	4,17
Current		A	7,78 - 7,39 - 7,12	10,20 - 9,66 - 9,31	13,40 - 12,80 - 12,30	18,10 - 17,20 - 16,50	20,00 - 19,00 - 18,30
Input power		kW	4,76	6,09	8,32	10,70	12,00
Starting current		A	1,00	1,00	1,00	2,00	2,00
External static pressure (Max)		Pa	80	80	80	80	80
Air flow		m^3/min	210	220	232	232	232
Sound pressure	Normal mode	dB(A)	54,0	57,0	60,0	61,0	62,0
	Silent mode 1 / 2	dB(A)	51,0 / 49,0	54,0 / 52,0	57,0 / 55,0	58,0 / 56,0	59,0 / 57,0
Sound power	Normal mode	dB(A)	76,0	78,0	81,0	82,0	82,0
Dimension	H x W x D	mm	1842 x 1180 x 1000	1842 x 1180 x 1000	1842 x 1180 x 1000	1842 x 1180 x 1000	1842 x 1180 x 1000
Net weight		kg	261	262	286	334	334
Piping diameter [2]	Liquid	Inch (mm)	3/8 (9,52) / 1/2 (12,70)	3/8 (9,52) / 1/2 (12,70)	1/2 (12,70) / 5/8 (15,88)	1/2 (12,70) / 5/8 (15,88)	1/2 (12,70) / 5/8 (15,88)
	Discharge	Inch (mm)	5/8 (15,88) / 3/4 (19,05)	3/4 (19,05) / 7/8 (22,22)	3/4 (19,05) / 7/8 (22,22)	7/8 (22,22) / 1 (25,40)	7/8 (22,22) / 1 (25,40)
	Suction	Inch (mm)	3/4 (19,05) / 7/8 (22,22)	7/8 (22,22) / 1 (25,40)	1 (25,40) / 1-1/8 (28,58)	1 (25,40) / 1-1/8 (28,58)	1-1/8(28,58)/1-1/4(31,75)
	Balance	Inch (mm)	1/4 (6,35)	1/4 (6,35)	1/4 (6,35)	1/4 (6,35)	1/4 (6,35)
Refrigerant (R410A) / CO_2 Eq.		kg / T	6,80 / 14,1984	6,80 / 14,1984	8,30 / 17,3304	8,30 / 17,3304	8,30 / 17,3304
Maximum allowable indoor / outdoor capacity ratio		%	50 ~ 150	50 ~ 150	50 ~ 150	50 ~ 150	50 ~ 150
Operating range	Cool Min ~ Max	°C	-10 ~ +52	-10 ~ +52	-10 ~ +52	-10 ~ +52	-10 ~ +52
	Heat Min ~ Max	°C	-20 ~ +18	-20 ~ +18	-20 ~ +18	-20 ~ +18	-20 ~ +18
	Simultaneous op.	°C	-10 ~ +24	-10 ~ +24	-10 ~ +24	-10 ~ +24	-10 ~ +24

ErP data [3]					
SEER [4]	**7,02**	**7,05**	**6,39**	**6,69**	**6,02**
$\eta_{s,c}$	**277,7%**	**278,9%**	**252,7%**	**264,4%**	**237,7%**
SCOP [4]	**4,85**	**4,25**	**4,27**	**4,13**	**3,81**
$\eta_{s,h}$	**190,9%**	**166,8%**	**167,8%**	**162,1%**	**149,3%**

1) EER and COP calculation is based in accordance to EN 14511. 2) Piping diameter under 90 m for ultimate indoor unit / over 90 m for ultimate indoor unit (if the longest piping equivalent length exceeds 90 m, increase the sizes of the main tubes by 1 rank for gas tubes and liquid tubes). 3) SEER / SCOP and $\eta_{s,c}$ / $\eta_{s,h}$ are in accordance with ErP test data for F2 type variable static pressure hide-away indoor units.
4) SEER / SCOP is calculated based on the seasonal space cooling / heating efficiency "η" values of the COMMISSION REGULATION (EU) 2016/2281. SEER, SCOP = (η + Correction) × PEF.

Solenoid valve kit	
KIT-P56HR3	3-Pipe control solenoid valve kit (up to 5,6 kW)
CZ-P56HR3	Solenoid valve kit (up to 5,6 kW)
CZ-CAPE2	3-Pipe control PCB
KIT-P160HR3	3-Pipe control solenoid valve kit (from 5,6 to 16,0 kW)
CZ-P160HR3	Solenoid valve kit (from 5,6 kW to 16,0 kW)
CZ-CAPE2	3-Pipe control PCB
CZ-CAPEK2 [5]	3-Pipe control PCB for wall-mounted

3-Pipe control box kit	
CZ-P456HR3	4 ports 3 pipe box (up to 5,6 kW per port)
CZ-P656HR3	6 ports 3 pipe box (up to 5,6 kW per port)
CZ-P856HR3	8 ports 3 pipe box (up to 5,6 kW per port)
CZ-P4160HR3	4 ports 3 pipe box (up to 16,0 kW per port)

5) Available for S-45/56/73/106MK3E.

HIGH COP | INVERTER+ | -20 °C HEATING MODE | COMMERCIAL SMART EDGE | 5 YEARS COMPRESSOR WARRANTY | EUROVENT CERTIFIED PERFORMANCE www.eurovent-certification.com

- Achieving SCOP 4,85 top class in the industry (LOT21 Seasonal heating efficiency value for 8 HP outdoor unit)
- Simultaneous cooling and heating operation with up to 39 indoor units
- Slim heat recovery boxes with just 200 mm height fit with the ceiling space limited in hotel applications

Technical focus

- High SEER / SCOP at full Load capacity (follows LOT21)
- Eurovent certified EER / COP
- Standardisation of outdoor unit to one compact casing size
- Connection of up to 52 indoor units
- High external static pressure 80 Pa with an efficient fan shape, fan guard, motor, and casing
- Silent outdoor unit operation: Minimum 54 dB(A) for 8 HP
- Bluefin coil coating as standard

3-Pipe ECOi EX MF3 Series · R410A - Combination from 18 to 48 HP

HP			18 HP	20 HP	22 HP	24 HP	26 HP	28 HP	30 HP	32 HP
Outdoor unit			U-8MF3E8	U-8MF3E8	U-10MF3E8	U-12MF3E8	U-10MF3E8	U-12MF3E8	U-14MF3E8	U-16MF3E8
			U-10MF3E8	U-12MF3E8	U-12MF3E8	U-12MF3E8	U-16MF3E8	U-16MF3E8	U-16MF3E8	U-16MF3E8
Power supply	Voltage	V	380 - 400 - 415	380 - 400 - 415	380 - 400 - 415	380 - 400 - 415	380 - 400 - 415	380 - 400 - 415	380 - 400 - 415	380 - 400 - 415
	Phase		Three phase	Three phase	Three phase	Three phase	Three phase	Three phase	Three phase	Three phase
	Frequency	Hz	50	50	50	50	50	50	50	50
Cooling capacity		kW	50,0	56,0	61,5	68,0	73,0	78,5	85,0	90,0
EER [1]		W/W	4,90	4,31	4,24	3,89	3,88	3,65	3,59	3,49
Current		A	16,80-16,00-15,40	21,00-20,00-19,20	23,70-22,50-21,70	28,30-26,90-25,90	31,00-29,50-28,40	35,10-33,40-32,20	39,60-37,60-36,20	42,60-40,50-39,00
Input power		kW	10,20	13,00	14,50	17,50	18,80	21,50	23,70	25,8
Heating capacity		kW	56,0	63,0	69,0	76,5	81,5	87,5	95,0	100,0
COP [1]		W/W	5,23	4,77	4,79	4,47	4,50	4,31	4,19	4,17
Current		A	17,70-16,80-16,20	21,30-20,30-19,50	23,50-22,30-21,50	27,60-26,30-25,30	30,20-28,70-27,70	33,50-31,80-30,70	37,90-36,00-34,70	40,10-38,10-36,70
Input power		kW	10,70	13,20	14,40	17,10	18,10	20,30	22,70	24,00
Starting current		A	2,00	2,00	2,00	2,00	3,00	3,00	4,00	4,00
External static pressure (Max)		Pa	80	80	80	80	80	80	80	80
Air flow		m³/min	430	442	452	464	452	464	464	464
Sound pressure	Normal mode	dB(A)	59,0	61,0	62,0	63,0	63,5	64,5	64,5	65,0
	Silent mode 1 / 2	dB(A)	56,0 / 54,0	58,0 / 56,0	59,0 / 57,0	60,0 / 58,0	60,5 / 58,5	61,5 / 59,5	61,5 / 59,5	62,0 / 60,0
Sound power	Normal mode	dB(A)	81,5	84,0	84,5	86,0	84,5	86,0	86,0	86,0
Dimension	H x W x D	mm	1842 x 2360 (+60) x 1000	1842 x 2360 (+60) x 1000	1842 x 2360 (+60) x 1000	1842 x 2360 (+60) x 1000	1842 x 2360 (+60) x 1000	1842 x 2360 (+60) x 1000	1842 x 2360 (+60) x 1000	1842 x 2360 (+60) x 1000
Net weight		kg	523	547	548	574	596	620	668	668
Piping diameter [2]	Liquid	Inch (mm)	5/8 (15,88) / 3/4 (19,05)	5/8 (15,88) / 3/4 (19,05)	5/8 (15,88) / 3/4 (19,05)	5/8 (15,88) / 3/4 (19,05)	3/4 (19,05) / 7/8 (22,22)	3/4 (19,05) / 7/8 (22,22)	3/4 (19,05) / 7/8 (22,22)	3/4 (19,05) / 7/8 (22,22)
	Discharge	Inch (mm)	7/8 (22,22) / 1 (25,40)	7/8 (22,22) / 1 (25,40)	1 (25,40) / 1-1/8 (28,58)	1 (25,40) / 1-1/8 (28,58)	1 (25,40) / 1-1/8 (28,58)	1-1/8 (28,58) / 1-1/4 (31,75)	1-1/8 (28,58) / 1-1/4 (31,75)	1-1/8 (28,58) / 1-1/4 (31,75)
	Suction	Inch (mm)	1-1/8 (28,58) / 1-1/4 (31,75)	1-1/8 (28,58) / 1-1/4 (31,75)	1-1/8 (28,58) / 1-1/4 (31,75)	1-1/8 (28,58) / 1-1/4 (31,75)	1-1/4 (31,75) / 1-1/2 (38,10)	1-1/4 (31,75) / 1-1/2 (38,10)	1-1/4 (31,75) / 1-1/2 (38,10)	1-1/4 (31,75) / 1-1/2 (38,10)
	Balance	Inch (mm)	1/4 (6,35)	1/4 (6,35)	1/4 (6,35)	1/4 (6,35)	1/4 (6,35)	1/4 (6,35)	1/4 (6,35)	1/4 (6,35)
Refrigerant (R410A) / CO_2 Eq.		kg / T	13,60/28,3968	15,10/31,5288	15,10/31,5288	16,60/34,6608	15,10/31,5288	16,60/34,6608	16,60/34,6608	16,60/34,6608
Maximum allowable indoor / outdoor capacity ratio		%	50 ~ 150	50 ~ 150	50 ~ 150	50 ~ 150	50 ~ 150	50 ~ 150	50 ~ 150	50 ~ 150
Operating range	Cool Min ~ Max	°C	-10 ~ +52	-10 ~ +52	-10 ~ +52	-10 ~ +52	-10 ~ +52	-10 ~ +52	-10 ~ +52	-10 ~ +52
	Heat Min ~ Max	°C	-20 ~ +18	-20 ~ +18	-20 ~ +18	-20 ~ +18	-20 ~ +18	-20 ~ +18	-20 ~ +18	-20 ~ +18
	Simultaneous op.	°C	-10 ~ +24	-10 ~ +24	-10 ~ +24	-10 ~ +24	-10 ~ +24	-10 ~ +24	-10 ~ +24	-10 ~ +24

HP			34 HP	36 HP	38 HP	40 HP	42 HP	44 HP	46 HP	48 HP
Outdoor unit			U-8MF3E8	U-8MF3E8	U-10MF3E8	U-8MF3E8	U-10MF3E8	U-12MF3E8	U-14MF3E8	U-16MF3E8
			U-10MF3E8	U-12MF3E8	U-12MF3E8	U-16MF3E8	U-16MF3E8	U-16MF3E8	U-16MF3E8	U-16MF3E8
			U-16MF3E8	U-16MF3E8	U-16MF3E8	U-16MF3E8	U-16MF3E8	U-16MF3E8	U-16MF3E8	U-16MF3E8
Power supply	Voltage	V	380 - 400 - 415	380 - 400 - 415	380 - 400 - 415	380 - 400 - 415	380 - 400 - 415	380 - 400 - 415	380 - 400 - 415	380 - 400 - 415
	Phase		Three phase	Three phase	Three phase	Three phase	Three phase	Three phase	Three phase	Three phase
	Frequency	Hz	50	50	50	50	50	50	50	50
Cooling capacity		kW	96,0	101,0	107,0	113,0	118,0	124,0	130,0	135,0
EER [1]		W/W	4,10	3,90	3,88	3,72	3,72	3,58	3,55	3,49
Current		A	38,60-36,70-35,40	42,30-40,20-38,70	45,60-43,30-41,70	50,20-47,70-46,00	52,40-49,70-47,90	56,50-53,70-51,80	61,10-58,10-56,00	63,90-60,70-58,50
Input power		kW	23,40	25,90	27,60	30,40	31,70	34,60	36,60	38,70
Heating capacity		kW	108,0	113,0	119,0	127,0	132,0	138,0	145,0	150,0
COP [1]		W/W	4,64	4,48	4,51	4,31	4,36	4,25	4,18	4,17
Current		A	38,90-37,00-35,60	41,60-39,50-38,10	43,60-41,40-39,90	49,30-46,80-45,10	50,60-48,10-46,30	53,70-51,00-49,10	57,90-55,00-53,00	60,10-57,10-55,00
Input power		kW	23,30	25,20	26,40	29,50	30,30	32,50	34,70	36,00
Starting current		A	4,00	4,00	4,00	5,00	5,00	5,00	6,00	6,00
External static pressure (Max)		Pa	80	80	80	80	80	80	80	80
Air flow		m³/min	662	674	684	674	684	696	696	696
Sound pressure	Normal mode	dB(A)	64,0	64,5	65,0	65,5	66,0	66,5	66,5	67,0
	Silent mode 1 / 2	dB(A)	61,0 / 59,0	61,5 / 59,5	62,0 / 60,0	62,5 / 60,5	63,0 / 61,0	63,5 / 61,5	63,5 / 61,5	64,0 / 62,0
Sound power	Normal mode	dB(A)	84,5	85,5	85,5	85,5	86,0	86,5	87,0	87,0
Dimension	H x W x D	mm	1842 x 3540 (+120) x 1000	1842 x 3540 (+120) x 1000	1842 x 3540 (+120) x 1000	1842 x 3540 (+120) x 1000	1842 x 3540 (+120) x 1000	1842 x 3540 (+120) x 1000	1842 x 3540 (+120) x 1000	1842 x 3540 (+120) x 1000
Net weight		kg	857	881	882	929	930	954	1002	1002
Piping diameter [2]	Liquid	Inch (mm)	3/4 (19,05) / 7/8 (22,22)	3/4 (19,05) / 7/8 (22,22)	3/4 (19,05) / 7/8 (22,22)	3/4 (19,05) / 7/8 (22,22)	3/4 (19,05) / 7/8 (22,22)	3/4 (19,05) / 7/8 (22,22)	3/4 (19,05) / 7/8 (22,22)	3/4 (19,05) / 7/8 (22,22)
	Discharge	Inch (mm)	1-1/8 (28,58) / 1-1/4 (31,75)	1-1/8 (28,58) / 1-1/4 (31,75)	1-1/4 (31,75) / 1-1/2 (38,10)	1-1/4 (31,75) / 1-1/2 (38,10)	1-1/4 (31,75) / 1-1/2 (38,10)	1-1/4 (31,75) / 1-1/2 (38,10)	1-1/4 (31,75) / 1-1/2 (38,10)	1-1/4 (31,75) / 1-1/2 (38,10)
	Suction	Inch (mm)	1-1/4 (31,75) / 1-1/2 (38,10)	1-1/2 (38,10) / 1-5/8 (41,28)	1-1/2 (38,10) / 1-5/8 (41,28)	1-1/2 (38,10) / 1-5/8 (41,28)	1-1/2 (38,10) / 1-5/8 (41,28)	1-1/2 (38,10) / 1-5/8 (41,28)	1-1/2 (38,10) / 1-5/8 (41,28)	1-1/2 (38,10) / 1-5/8 (41,28)
	Balance	Inch (mm)	1/4 (6,35)	1/4 (6,35)	1/4 (6,35)	1/4 (6,35)	1/4 (6,35)	1/4 (6,35)	1/4 (6,35)	1/4 (6,35)
Refrigerant (R410A) / CO_2 Eq.		kg / T	21,90/45,72719	23,40/48,85919	23,40/48,85919	23,40/48,85919	23,40/48,85919	24,90/46,3536	24,90/51,9912	24,90/51,9912
Maximum allowable indoor / outdoor capacity ratio		%	50 ~ 150	50 ~ 150	50 ~ 150	50 ~ 150	50 ~ 150	50 ~ 150	50 ~ 150	50 ~ 150
Operating range	Cool Min ~ Max	°C	-10 ~ +52	-10 ~ +52	-10 ~ +52	-10 ~ +52	-10 ~ +52	-10 ~ +52	-10 ~ +52	-10 ~ +52
	Heat Min ~ Max	°C	-20 ~ +18	-20 ~ +18	-20 ~ +18	-20 ~ +18	-20 ~ +18	-20 ~ +18	-20 ~ +18	-20 ~ +18
	Simultaneous op.	°C	-10 ~ +24	-10 ~ +24	-10 ~ +24	-10 ~ +24	-10 ~ +24	-10 ~ +24	-10 ~ +24	-10 ~ +24

1) EER and COP calculation is based in accordance to EN 14511. 2) Piping diameter under 90 m for ultimate indoor unit / over 90 m for ultimate indoor unit (if the longest piping equivalent length exceeds 90 m, increase the sizes of the main tubes by 1 rank for gas tubes and liquid tubes).

Rating conditions: Cooling indoor 27 °C DB / 19 °C WB. Cooling outdoor 35 °C DB / 24 °C WB. Heating indoor 20 °C DB. Heating outdoor 7 °C DB / 6 °C WB. (DB: Dry Bulb; WB: Wet Bulb).
Specifications subject to change without notice. For detailed information about ErP / Energy Labelling, please visit our websites www.aircon.panasonic.eu or www.ptc.panasonic.eu.

Eurovent VRF certified technical data: 3-Pipe ECOi EX MF3 Series 8 to 16 HP · R410A

HP			8 HP		10 HP		12 HP		14 HP		16 HP	
Outdoor unit			U-8MF3E8		U-10MF3E8		U-12MF3E8		U-14MF3E8		U-16MF3E8	
Indoor units combination S-**MU2: S-**MU2E5C S-**MF2: S-**MF2E5A			4x S-56MU2	4x S-56MF2	4x S-73MU2	4x S-73MF2	6x S-56MU2	6x S-56MF2E	2x S-60MU2, 4x S-73MU2	2x S-60MF2, 4x S-73MF2	6x S-73MU2	6x S-73MF2
Cooling	Pc out [1]	kW	22,4	22,4	28,0	28,0	33,5	33,5	40,0	40,0	45,0	45,0
	Pec out [2]	kW	7,2	7,2	10,8	10,8	12,9	12,9	15,4	15,4	19,6	19,6
	EERout		3,1	3,1	2,6	2,6	2,6	2,6	2,6	2,6	2,3	2,3
Seasonal Cooling	SEER		7,0	7,0	7,0	7,0	6,4	6,4	6,7	6,7	6,0	6,0
	$\eta_{s,c}$	%	277,7	277,0	278,9	277,0	252,7	253,0	264,4	265,0	237,7	237,0
Cooling PL Condition B	PcB	kW	16,5	16,5	20,6	20,6	24,6	24,6	29,4	29,4	33,1	33,1
	EERB		4,9	4,9	4,6	4,6	4,3	4,3	4,4	4,4	3,9	3,9
Cooling PL Condition C	PcC	kW	10,6	10,6	13,2	13,2	15,8	15,8	18,9	18,9	21,3	21,3
	EERC		9,1	9,1	9,3	9,3	7,7	7,7	8,3	8,3	7,4	7,4
Cooling PL Condition D	PcD	kW	7,2	7,2	8,5	8,5	7,1	7,1	8,5	8,5	9,4	9,4
	EERD		16,5	16,5	19,7	19,7	15,7	15,7	19,7	19,7	17,4	17,4
Seasonal Heating	Pdesign	kW	17,5	17,5	22,0	22,0	26,2	26,2	31,5	31,5	35,0	35,0
	SCOP		4,8	4,8	4,2	4,2	4,3	4,3	4,1	4,1	3,8	3,8
	$\eta_{s,h}$	%	190,9	189,0	166,8	165,0	167,8	169,0	162,1	161,0	149,3	149,0
Heating PL Condition A	PhA	kW	15,4	15,4	19,4	19,4	23,1	23,1	27,8	27,8	30,9	30,9
	COPA		2,9	2,9	2,5	2,5	2,7	2,7	2,4	2,4	2,2	2,2
Heating PL Condition B	PhB	kW	9,4	9,4	11,8	11,8	14,1	14,1	16,9	16,9	18,8	18,8
	COPB		4,6	4,6	3,7	3,7	3,7	3,7	3,6	3,6	3,3	3,3
Heating PL Condition C	PhC	kW	6,0	6,0	7,6	7,6	9,0	9,0	10,9	10,9	12,1	12,1
	COPC		7,1	7,1	7,4	7,4	6,9	6,9	7,1	7,1	6,5	6,5
Heating PL Condition D	PhD	kW	6,7	6,7	6,9	6,9	6,5	6,5	6,6	6,6	6,6	6,6
	COPD		8,7	8,7	9,4	9,4	9,0	9,0	9,6	9,6	9,6	9,6
T bivalent	Tbiv	°C	-9	-9	-7	-7	-9	-9	-7	-7	-7	-7
	PhTbiv	kW	16,8	16,8	19,4	19,4	25,1	25,1	27,8	27,8	30,9	30,9
	COPTbiv		2,6	2,6	2,5	2,5	2,3	2,3	2,4	2,4	2,2	2,2
Psbc		W	17,0	17,0	17,0	17,0	17,0	17,0	25,0	25,0	25,0	25,0
Poffc		W	17,0	17,0	17,0	17,0	17,0	17,0	25,0	25,0	25,0	25,0
Ptoc		W	17,0	17,0	17,0	17,0	17,0	17,0	25,0	25,0	25,0	25,0
Pckc		W	50,0	50,0	50,0	50,0	50,0	50,0	91,0	91,0	91,0	91,0
Psbh		W	50,0	50,0	50,0	50,0	50,0	50,0	91,0	91,0	91,0	91,0
Poffh		W	50,0	50,0	50,0	50,0	50,0	50,0	91,0	91,0	91,0	91,0
Ptoh		W	50,0	50,0	50,0	50,0	50,0	50,0	91,0	91,0	91,0	91,0
Pckh		W	50,0	50,0	50,0	50,0	50,0	50,0	91,0	91,0	91,0	91,0
Sound power level / in heating		dB(A)	79 / 77	—	80 / 82	—	84 / 86	—	86 / 86	—	86 / 88	—

1) Pc out= Capacity. 2) Pec out= Input power. *Please refer an official website (https://www.eurovent-certification.com/en) for each test condition.